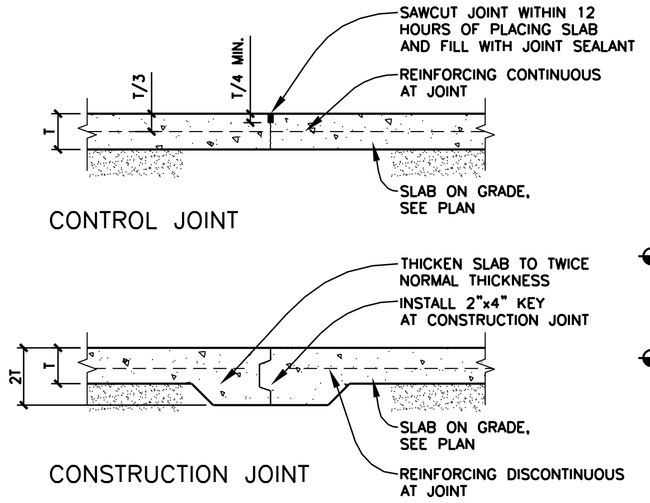

1 SECTION
N.T.S.

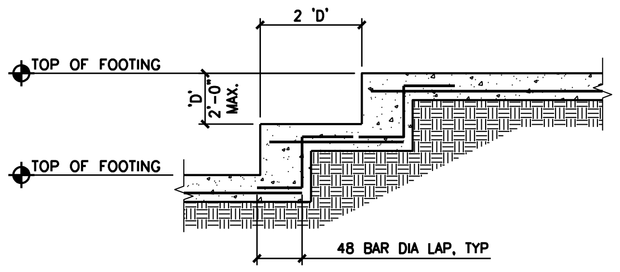

2 TYPICAL FOOTING STEP
N.T.S.

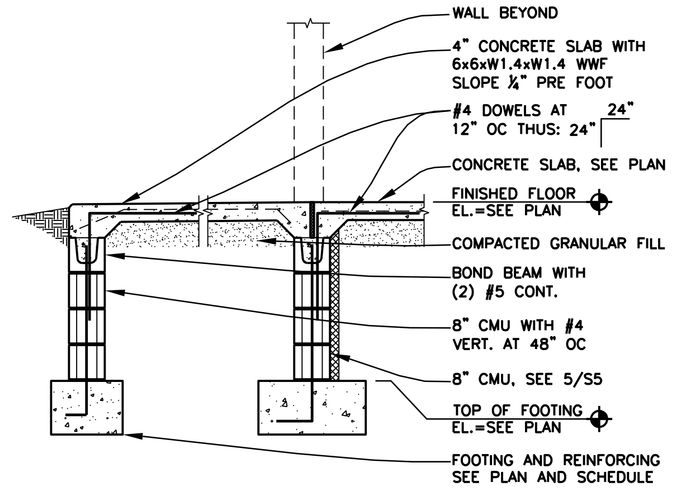

3 SECTION
1/2"=1'-0"

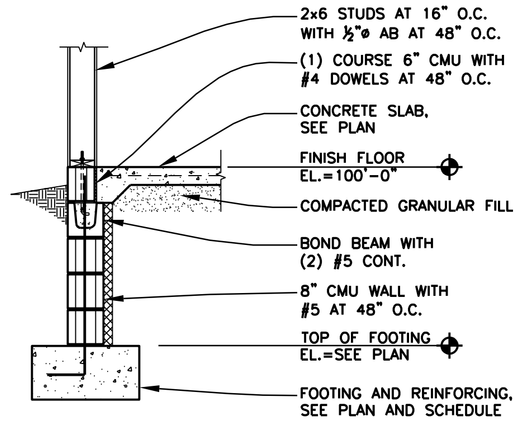

4 SECTION
1/2"=1'-0"

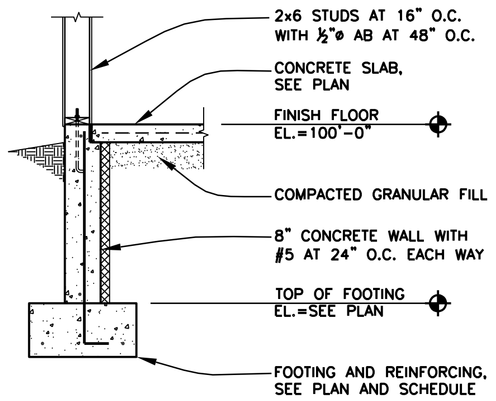

4A SECTION (CONTRACTOR ALT)
1/2"=1'-0"

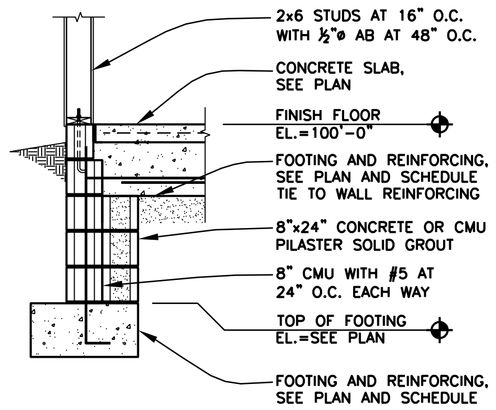

5 SECTION (CONTRACTOR ALT)
1/2"=1'-0"

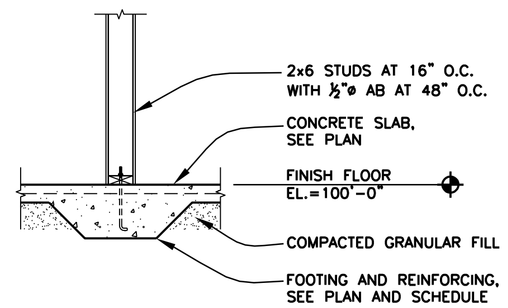

6 SECTION
1/2"=1'-0"

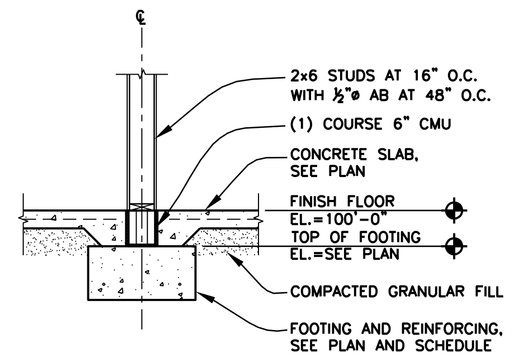

6A SECTION (CONTRACTOR ALT)
1/2"=1'-0"

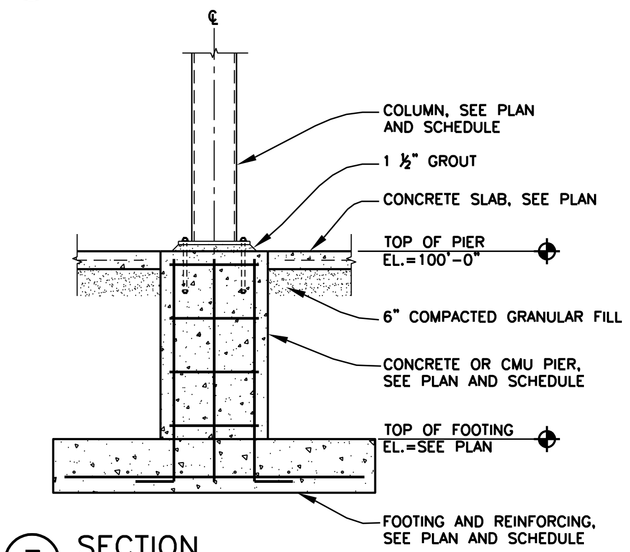

7 SECTION
1/2"=1'-0"

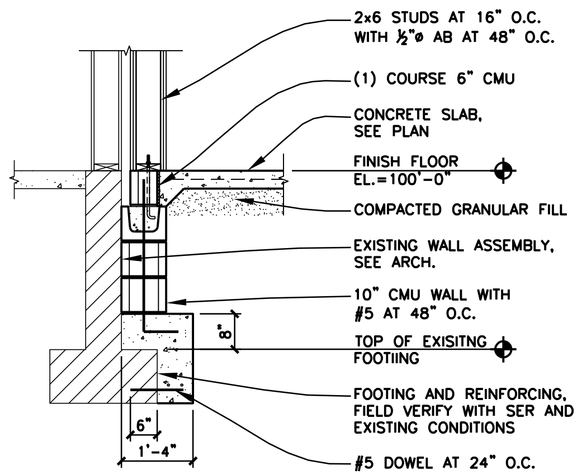

8 SECTION
1/2"=1'-0"

NEGEN COMMERCIAL • RESIDENTIAL ARCHITECTS
STUDIO 22517 178th Ave.
CORRESPONDENCE Suite 200 Cold Spring, Minnesota 56320
TELEPHONE 320.685.3304
FACSIMILE 320.685.4039
WEB www.negenarchitects.com

CONSULTANTS

DUFFY ENGINEERING AND ASSOCIATES, INC.
STRUCTURAL - CIVIL - SURVEYING - MECHANICAL - ELECTRICAL
350 Highway 10 South, Suite 101
St. Cloud, MN 56304
Phone: (320) 259-6575
Fax: (320) 259-6991
Email: mail@duffyeng.com

PEACE LUTHERAN CHURCH
1000 Red River Avenue North
Cold Spring, MN 56320

REVISION	DATE

I hereby certify that this plan, specification or report was prepared by me or under my direct supervision and that I am a duly Licensed **ENGINEER** under the laws of the state of **MINNESOTA**

RYAN J. SEAVERT, PE

03-31-10 — Date
41971 — License No.

SECTIONS AND DETAILS

PROJECT NO.:	10048
SCALE:	
DATE:	03-31-10
DRAWN BY:	AJM
CHECKED BY:	RJS

S4.1

Duffy Project File: 10048 SS04.1