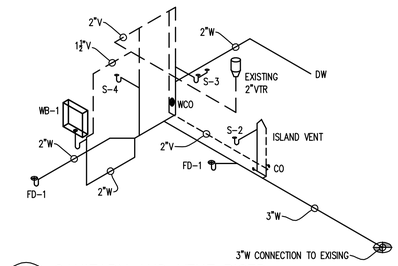

2 P9.1 SANITARY AND VENT RISER

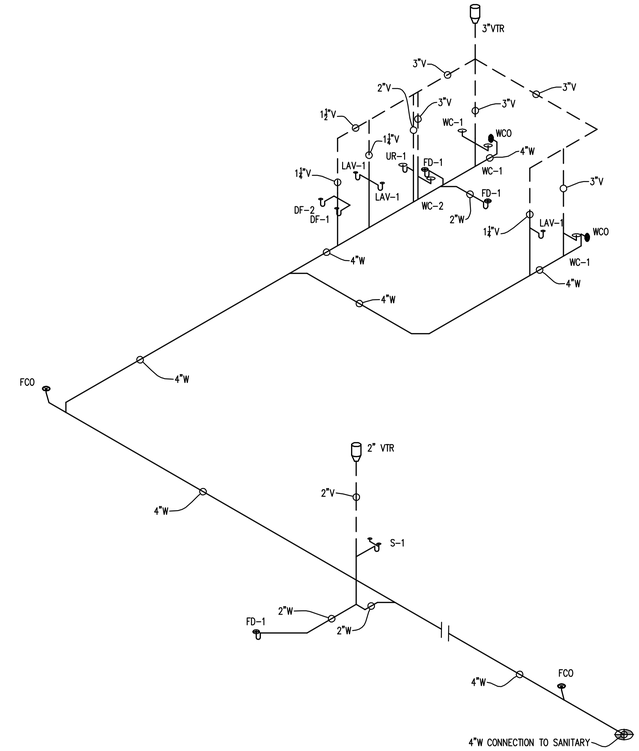

1 P9.1 SANITARY AND VENT RISER
EAST ADDITION

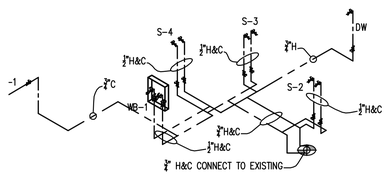

4 P9.1 DOMESTIC WATER RISER
KITCHEN/SERVING AREA

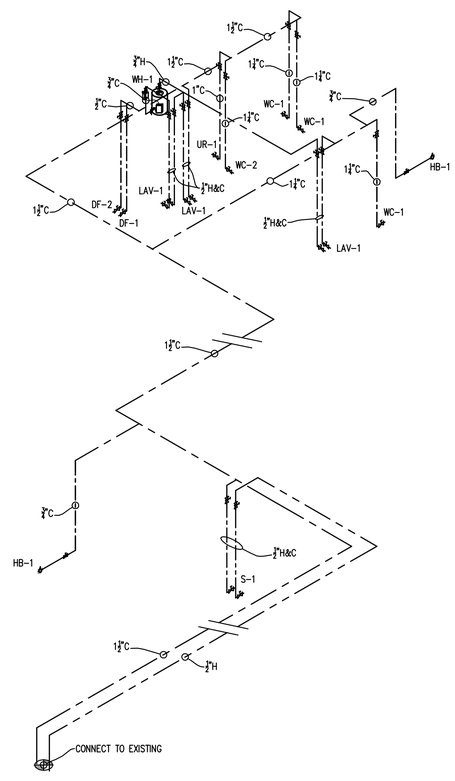

3 P9.1 DOMESTIC WATER RISER
EAST ADDITION

NEGEN ARCHITECTS
STUDIO: 22517 178th Ave.
CORRESPONDENCE: Suite 200
Cold Spring, Minnesota 56320
TELEPHONE: 320.685.3304
FACSIMILE: 320.685.4039
WEB: www.negenarchitects.com

CONSULTANTS
DUFFY ENGINEERING AND ASSOCIATES, INC
STRUCTURAL – CIVIL – SURVEYING
MECHANICAL – ELECTRICAL
350 Highway 10 South, Suite 101
St. Cloud, MN 56304
Phone: (320) 259-6575
Fax: (320) 259-6991
Email: mail@duffyeng.com

PEACE LUTHERAN CHURCH
1000 Red River Avenue North
Cold Spring, MN 56320

REVISION	DATE

I hereby certify that this plan, specification or report was prepared by me or under my direct supervision and that I am a duly Licensed Engineer under the laws of the state of Minnesota.

PERRY R. NISTLER P.E.

3-31-10 Date — 22468 License No.

PLUMBING RISERS

COMM. NO.:	1070
SCALE:	AS SHOWN
DATE:	MARCH 31, 2010
DRAWN BY:	KLJ

P9.1